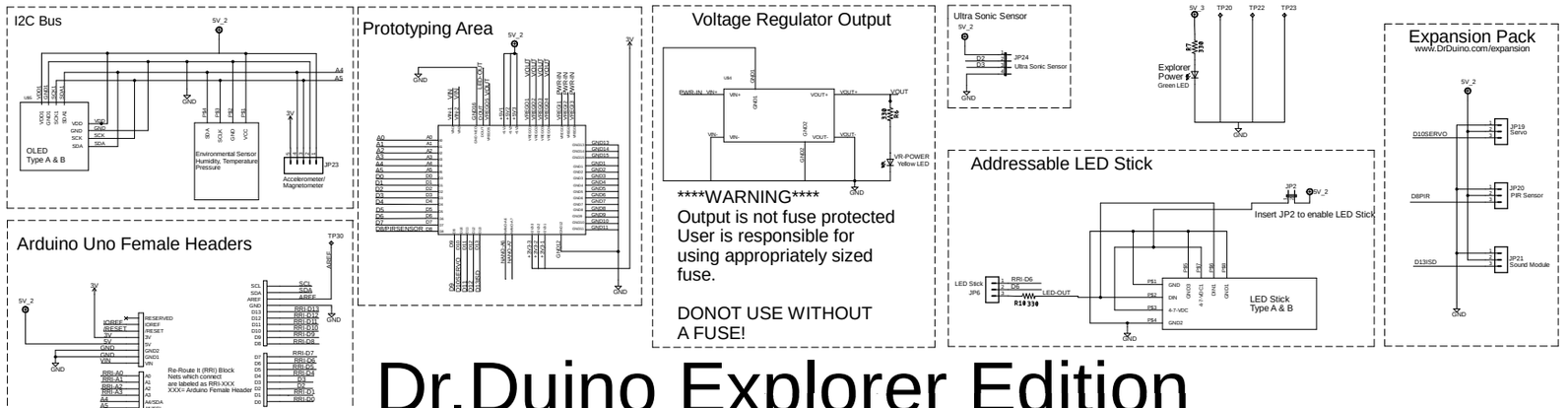

Dr.Duino Explorer Edition

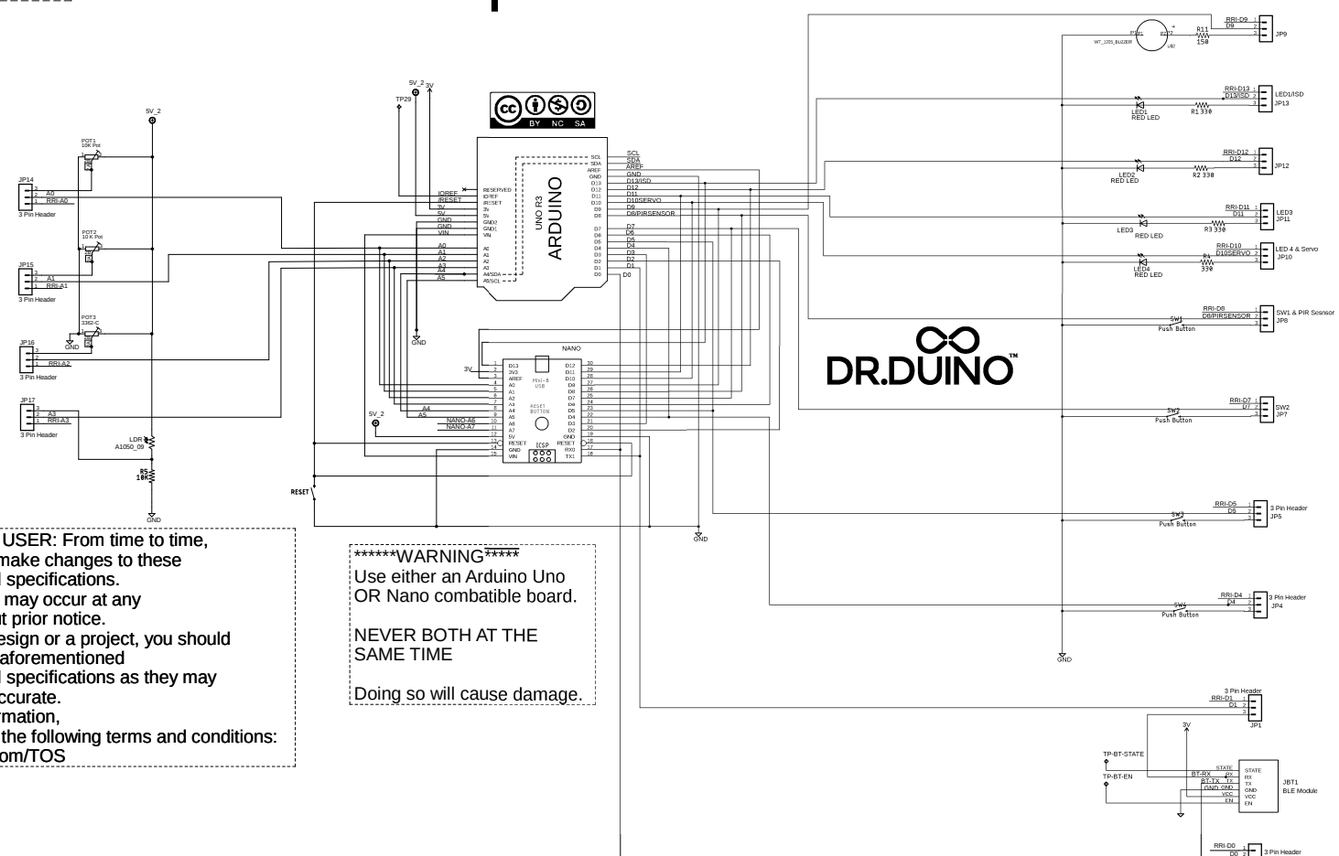

NOTE TO THE USER: From time to time,
Dr. Duino may make changes to these
schematics and specifications.
These changes may occur at any
time and without prior notice.
In finalizing a design or a project, you should
not rely on the aforementioned
schematics and specifications as they may
not be totally accurate.
For further information,
please refer to the following terms and conditions:
www.DrDuino.com/TOS

******WARNING*****
Use either an Arduino Uno
OR Nano combatible board.

NEVER BOTH AT THE
SAME TIME

Doing so will cause damage.

BY NC SA

TITLE:	Dr.Duino Explorer Edition
Document Number:	For PCB Revision B3
REV:	1
Date: April 25, 2020	Sheet: 1/1